Doosan Machine Tools

TWIN-SPINDLE, TWIN-TURRET TURNING CENTERS WITH Y-AXES

PUMA TT

1800MS/SY

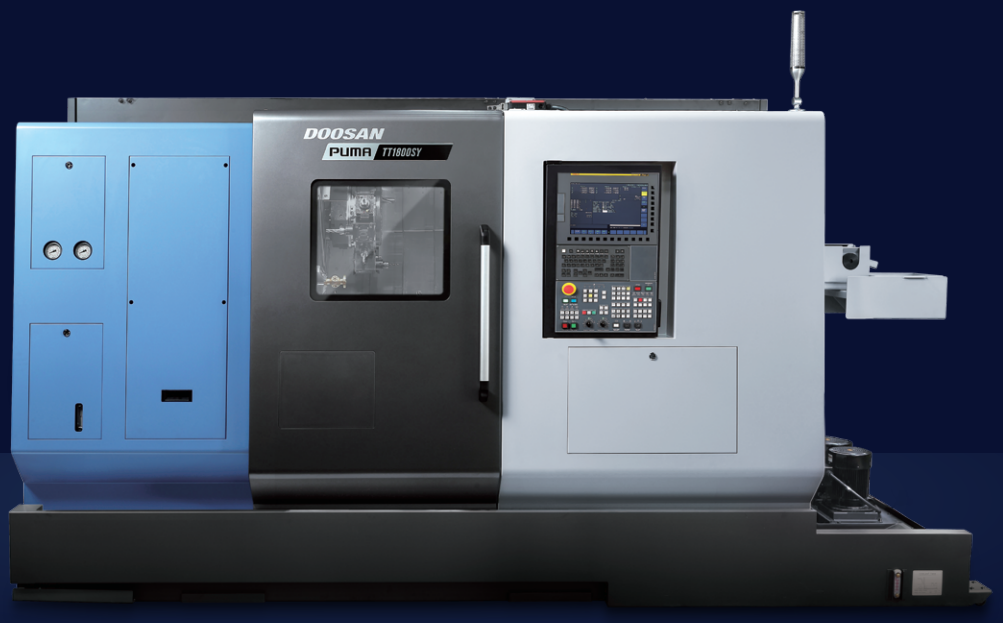

PUMA TT1800 SERIES

The PUMA TT1800SY series is an 8" chuck/ 65mm (2.6 inch) bar diameter capacity high-productivity horizontal turning center equipped with twin opposed spindles, and upper and lower turrets. The left and right spindles can machine, and eject, workpieces independently for best-in-class productivity.

The PUMA TT Series has become one of DOOSAN's best-selling products and is favored by customers all around the world.

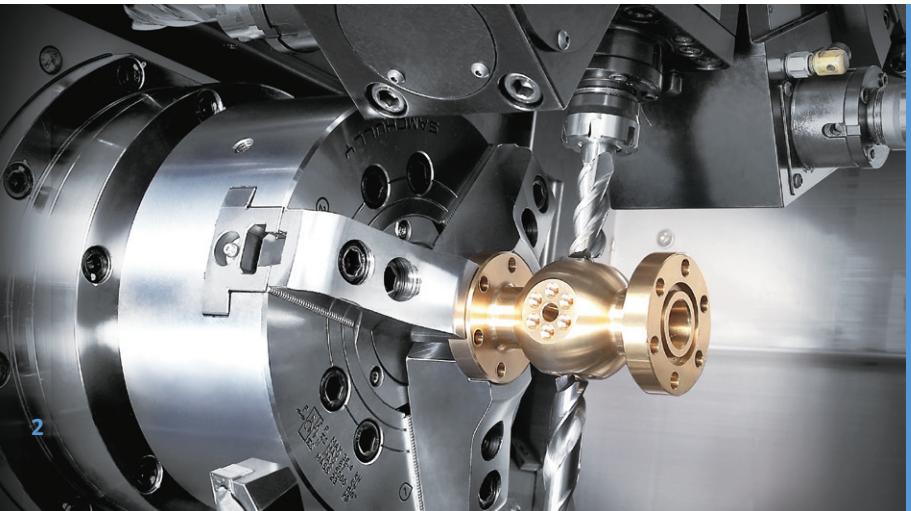

The compact PUMA TT is packed with one-setup efficiency. Thanks to its 24 tool positions in the upper and lower turrets, you'll complete complicated parts that require plenty of tools in just one setup.

EXCELLENT RIGIDITY AND POWER

The left and right spindles and the upper and lower turrets operate independently to double the machine’s productivity.

DOUBLED PRODUCTIVITY

The machine's 40m/min rapid rates and high-rigidity roller LM guideways deliver impressive speed and productivity.

ADVANCED AUTOMATION

The left and right spindles are equipped with independent parts catcher and unloading/conveyor systems for fully-automated operation.

FLEXIBLE MACHINING

PUMA TT 1800SY A versatile performer

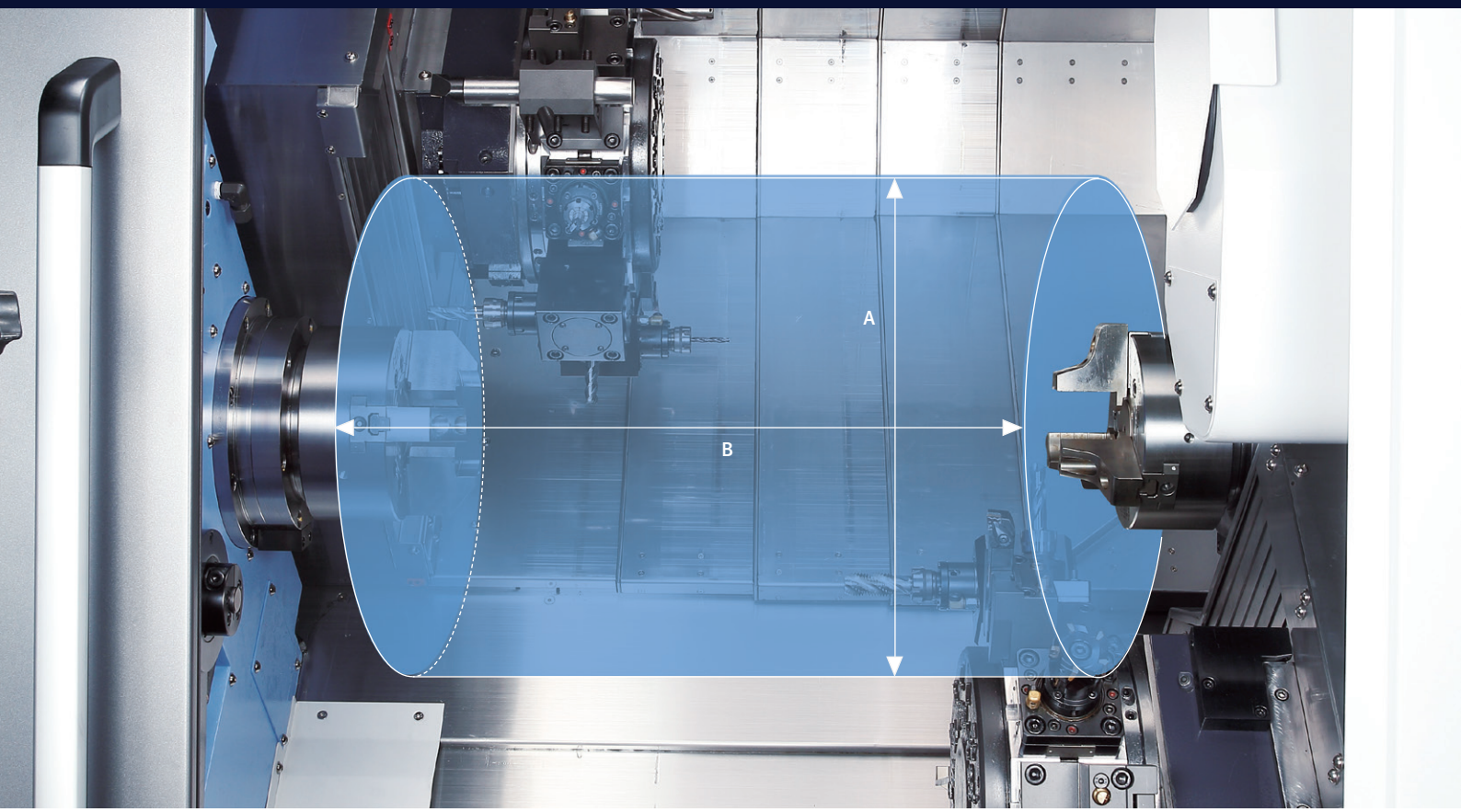

(A) max. turning diameter of

230 mm
9.1 inch

(B) max. turning diameter of

230 mm
9.1 inch

Bar working diameter of

65 mm
2.6 inch

Y-axis stroke

100 (±50) mm
3.9 (±2.0) inch

Y-axis rapid traverse rate

7.5 m/min
295.3 ipm

Y-Axis Milling

A wide variety of multi-axis milling cycles can be achieved using the Y-axis.

GROOVE FINISH CUTTING USING THE Y-AXIS

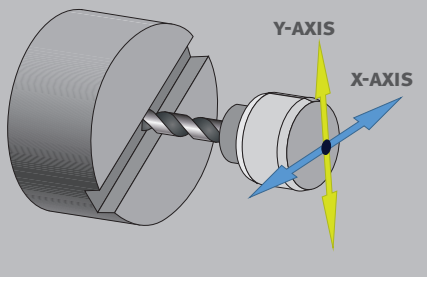

MULTI-FACE CUTTING

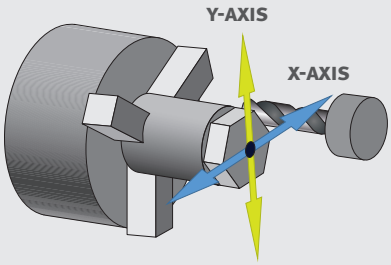

MILLING IN AN ECCENTRIC POSITION

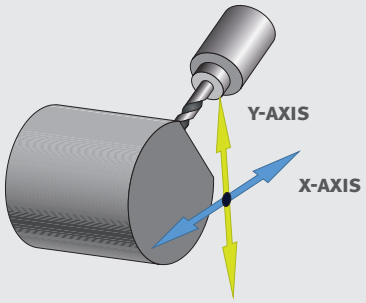

Y & X-AXIS CIRCULAR INTERPOLATION

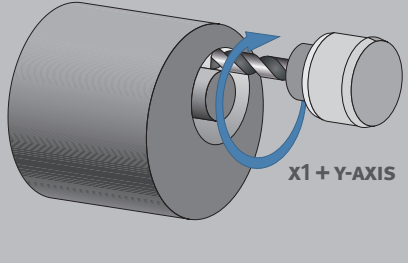

SPINDLE

High-speed and high-power spindle delivers impressive productivity.

Built-in design

The PUMA TT series is equipped with built-in spindles that deliver high-speed and responsiveness.
The two opposing spindles provide equally high turning performance using motors with the same speed and power.

Left spindle, Right spindle (8 inch)

Max. Power

22/15 kW
29.5 / 20.1 Hp

Max. Speed

5000 r/min

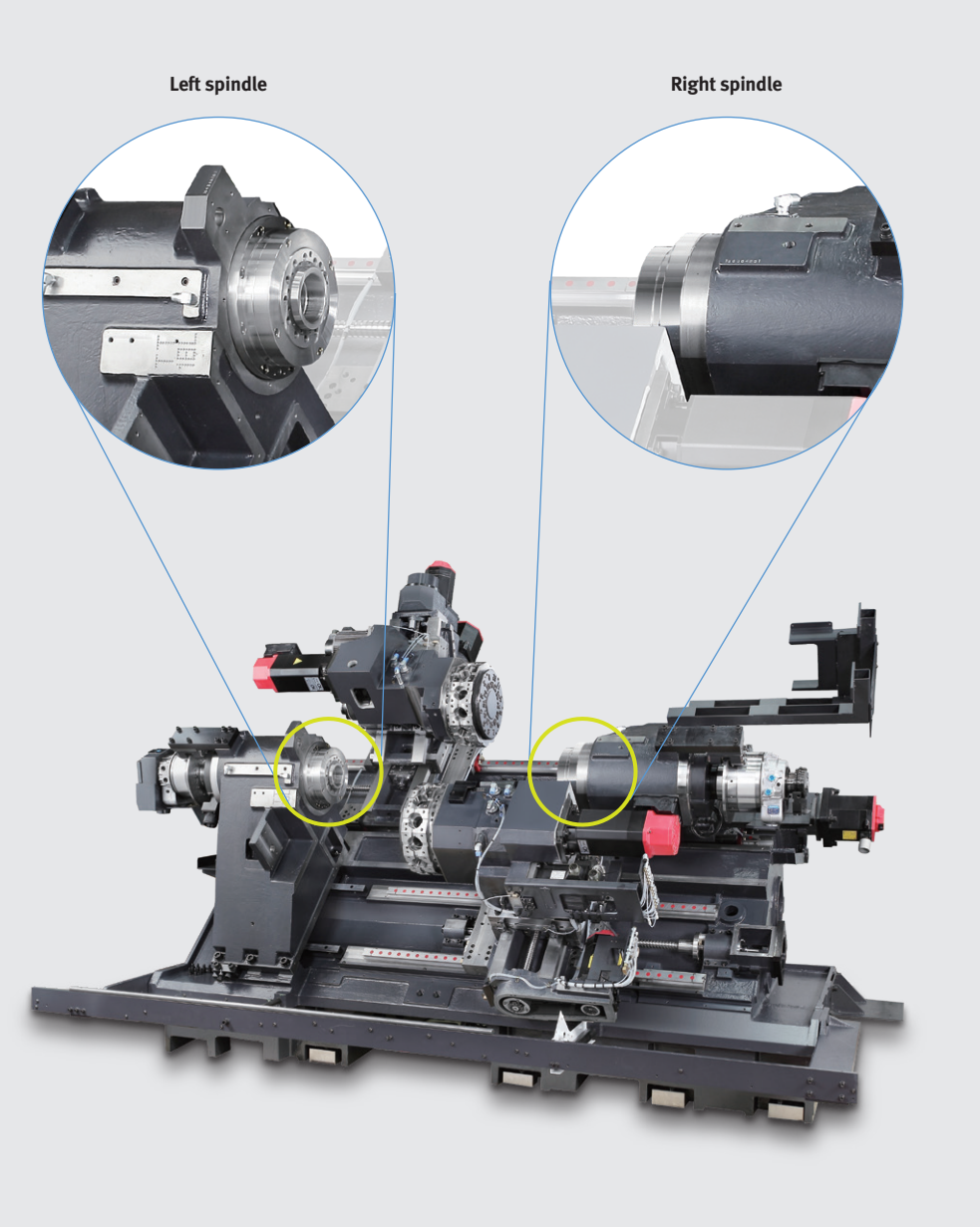

C-axis Accuracy

The positioning and repeatability of the C-axis has been enhanced.

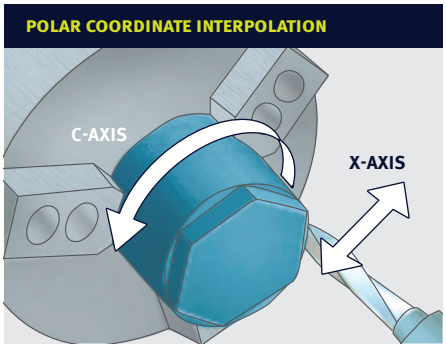

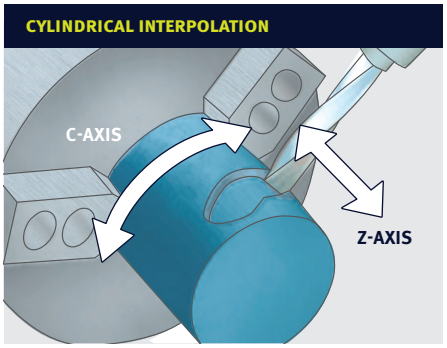

BASIC STRUCTURE

The Z- and A- axes are equipped with roller LM guide ways for increased rigidity and high speed, while the X- and Y-axes have a box guideway design for optimum rigidity: together they deliver maximum productivity.

Feed Axes configuration

High-productivity is achieved with a process-intensive structure comprising opposing spindles and upper and lower turrets.

Description		Unit	PUMA TT1800MS	PUMA TT1800SY
Travel distance	X1, X2 axes	mm (inch)	X1: 165 (6.5) / X2: 190 (7.5)	
	Z1, Z2 axes	mm (inch)	Z1: 700 (27.6) / Z2: 720 (28.3)	
	Y axes	mm (inch)	-	100 (±50) (3.9 (±2.0))
	A axes	mm (inch)	770 (30.3)	
Rapid traverse rate	X1, X2 axes	m/min (ipm)	20 (787.4)	
	Z1, Z2 axes	m/min (ipm)	40 (1574.8)	
	Y axes	m/min (ipm)	-	7.5 (295.3)
	A axes	m/min (ipm)	40 (1574.8)	

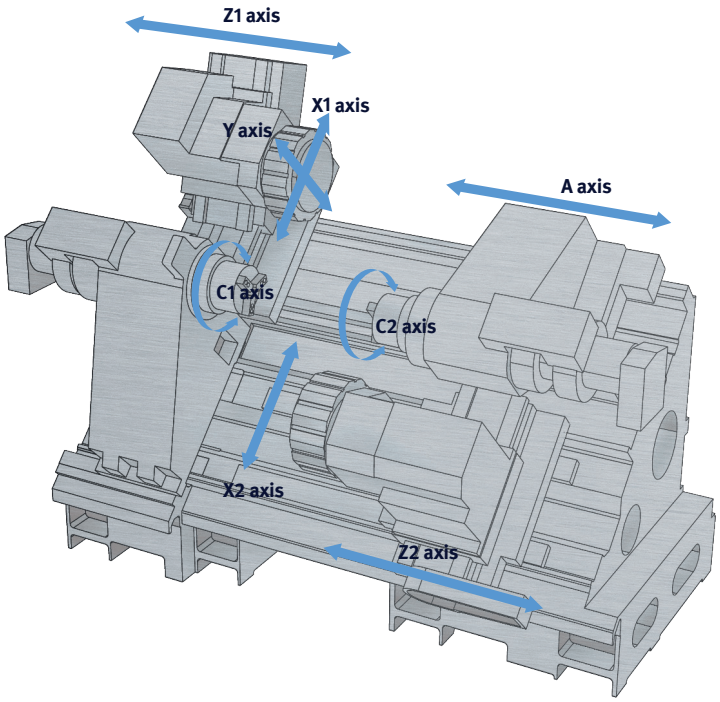

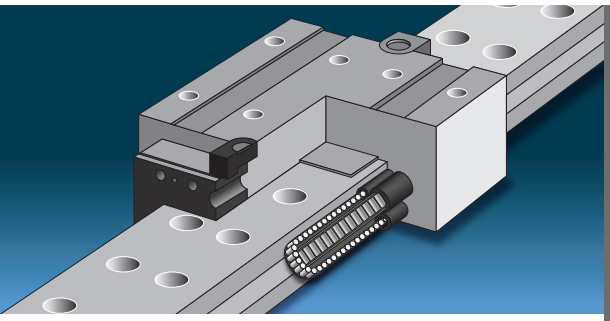

LM Guide

High-rigidity / high-speed structure with roller LM guides on the Z- and A-axes.

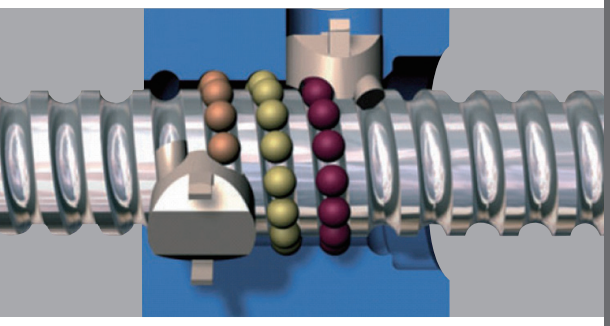

Ball Screw

Temperature fluctuations on the travel system have been minimized through the use of low friction ball screws.

DESIGNED AS A WIDE-RIB TORQUE-TUBE STRUCTURE TO PREVENT TWISTING AND DEFORMATION.

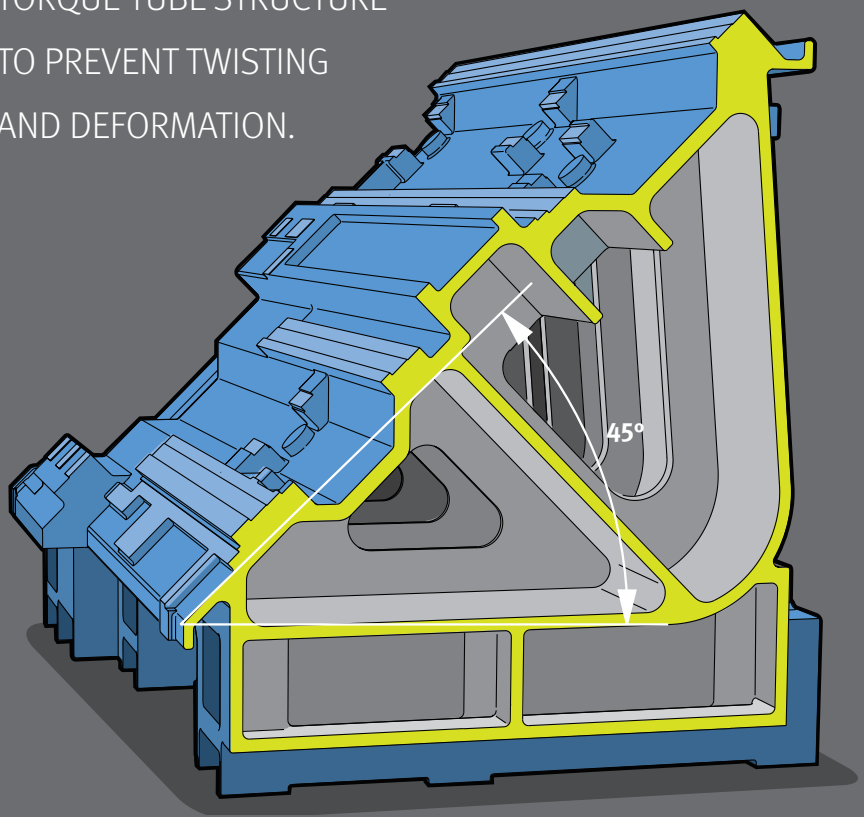

TURRETS

Featuring stronger and faster turrets; upgraded servo motors for faster and more accurate tool rotation; and a stabilized structure for higher productivity and heavier-cutting capabilities.

Turret indexing time (1 face)

0.15 s

No. of tool stations

(the same for the upper and lower turret)

12 station

No. of index positions

(the same for the upper and lower turret)

24 index position

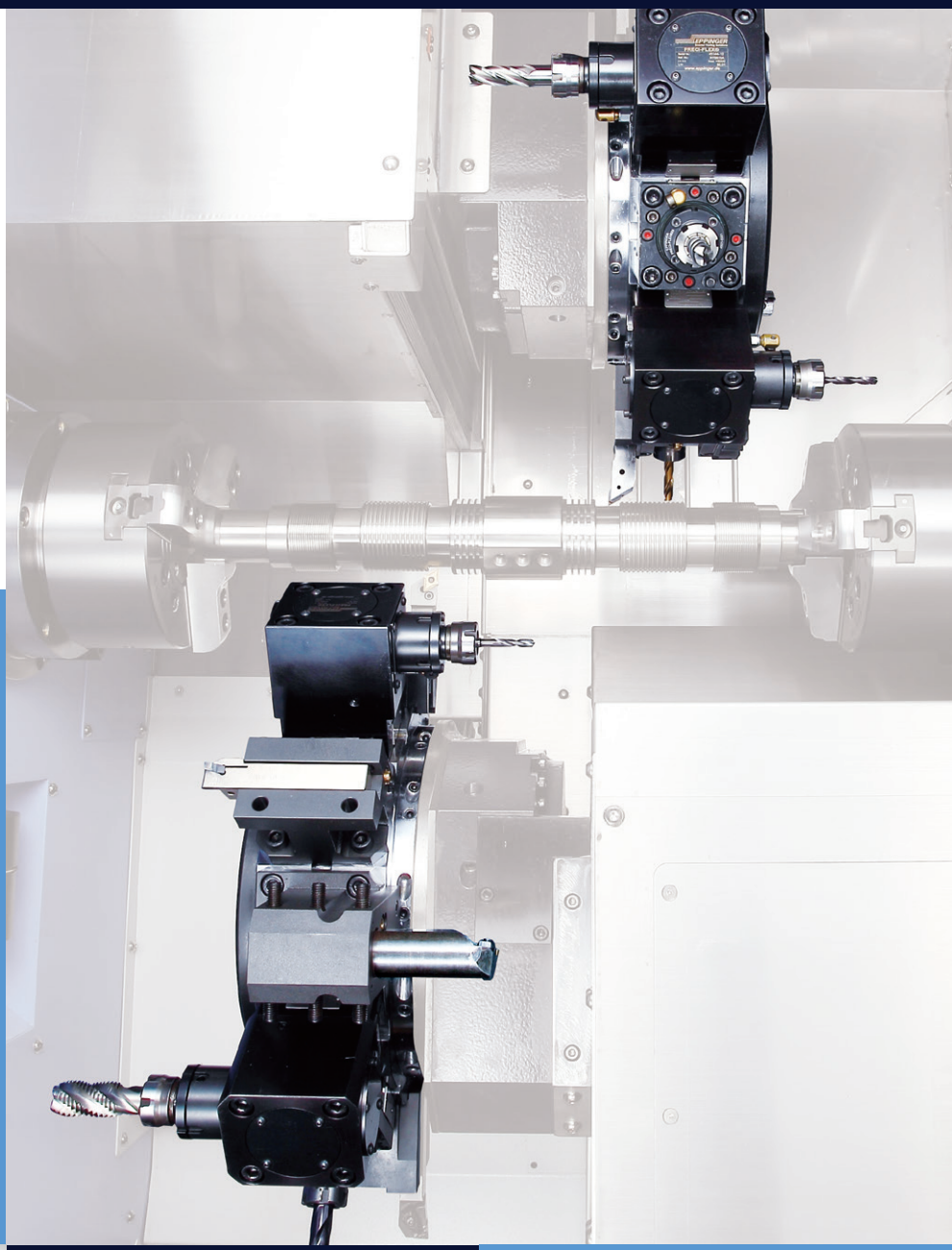

Turret with Upgraded Speed and Rigidity

The newly-designed turret has passed stricter speed and side loading tests. In addition, the cross-roller bearing reduces backlash and improves accuracy due to its improved rigidity. Indexing time has been reduced by 20- 30% compared with previous models.

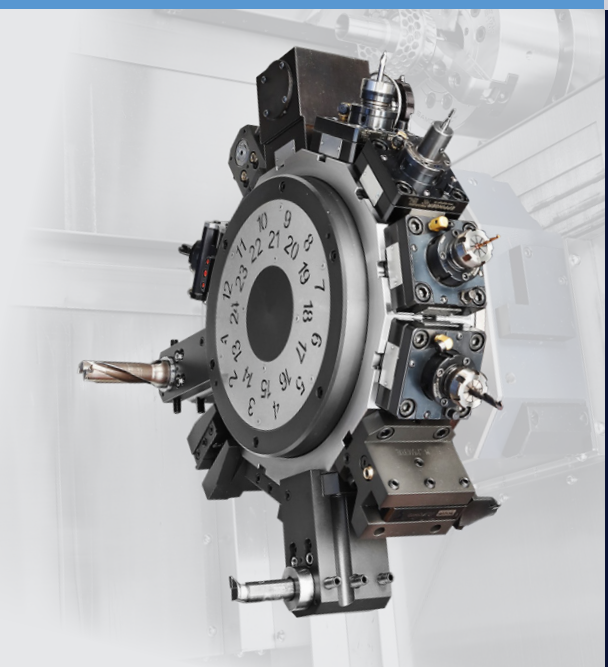

- REDUCE NON-CUTTING TIME BY 10%
- HIGHER INDEXING SPEEDS
- IMPROVED ACCURACY

Rotary Tool Structure is Highly Resistant to Thermal Displacement

The milling turret, including rotary tools, features a BMT design for higher rigidity. In addition, the minimization of thermal error due to oil and air lubrication of the rotary tools delivers class-leading milling, drilling and tapping performance.

CUTTING CONCEPTS

Multi-tasking with left and right spindles and upper and lower turrets optimizes productivity.

“LONG SHAFT MACHINING BY SYNCHRONISING THE ROTATION OF BOTH SPINDLES” CONCEPT

PUMA TT Series turning centers can double productivity when machining long workpieces through the synchronized control of the left and right spindles and using both the upper and lower turrets for simultaneous machining.

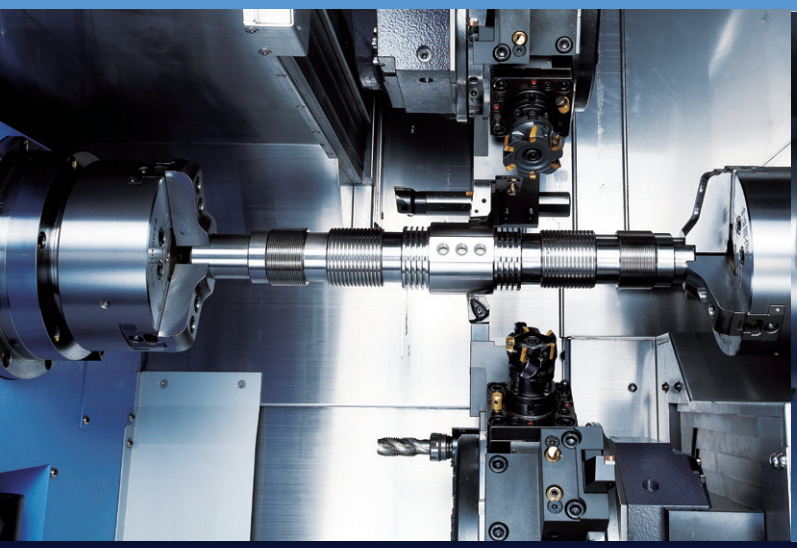

Turning at the same position is carried out using the upper and lower turrets simultaneously.

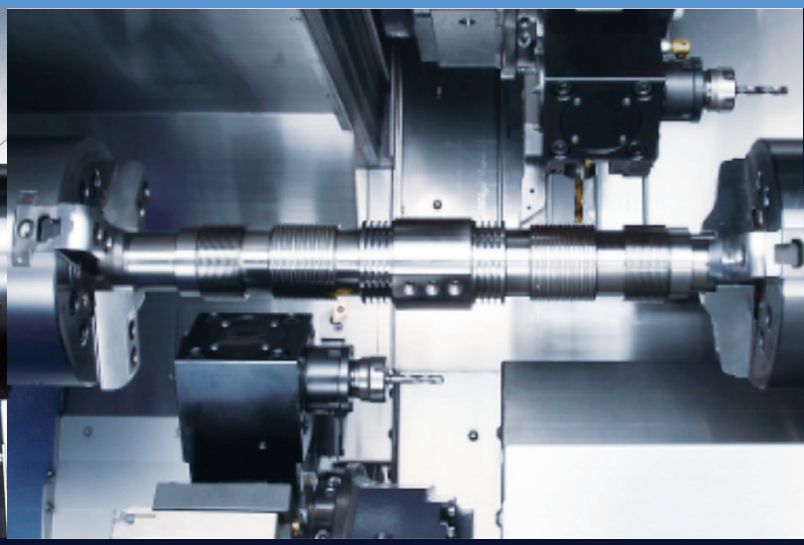

Different cutting processes can be carried out on a single workpiece using the upper and lower turrets simultaneously.

“ONE MACHINE, TWO PARTS” CONCEPT

PUMA TT Series turning centers double productivity thanks to the independent, yet simultaneous, operation of the left and right spindles and the upper and lower turrets.

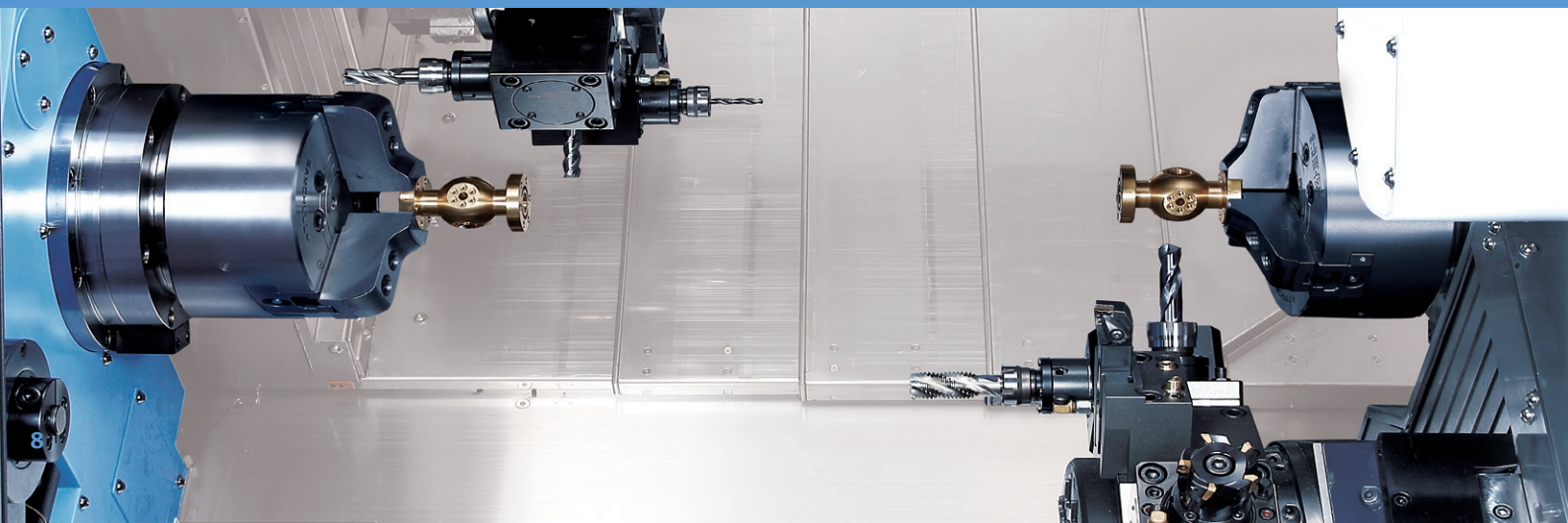

CUTTING CONCEPTS

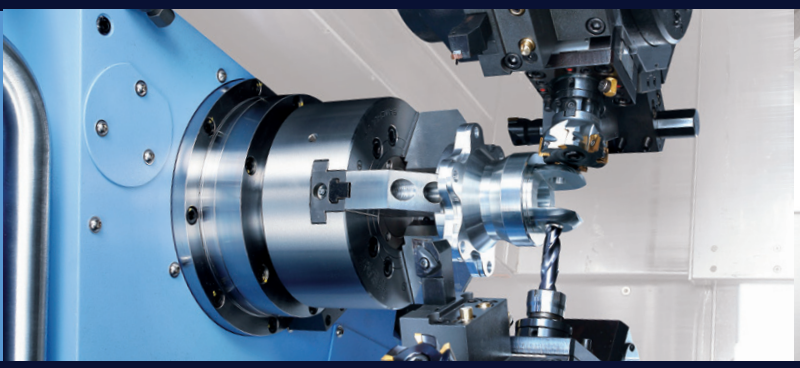

LEFT SPINDLE
Upper and lower turret simultaneously machining with left spindle

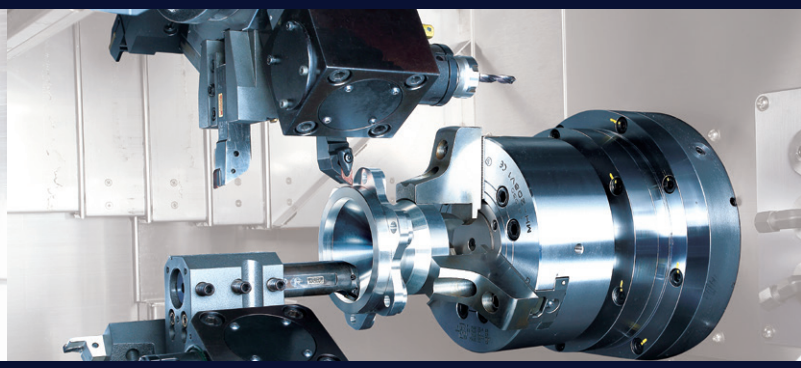

RIGHT SPINDLE
Upper and lower turret simultaneously machining with right spindle

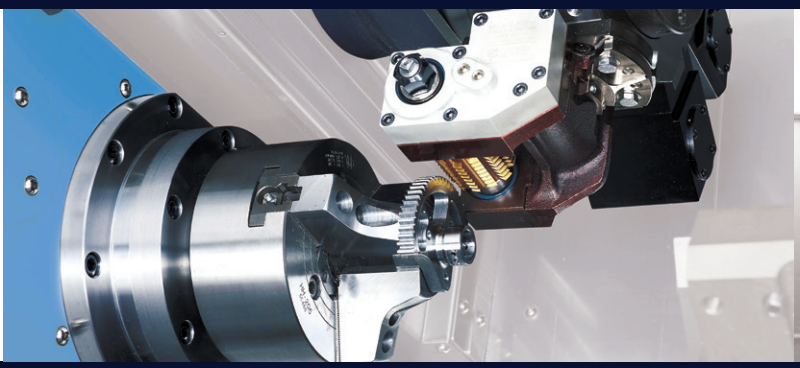

LEFT SPINDLE
Gear hobbing and polygon turning

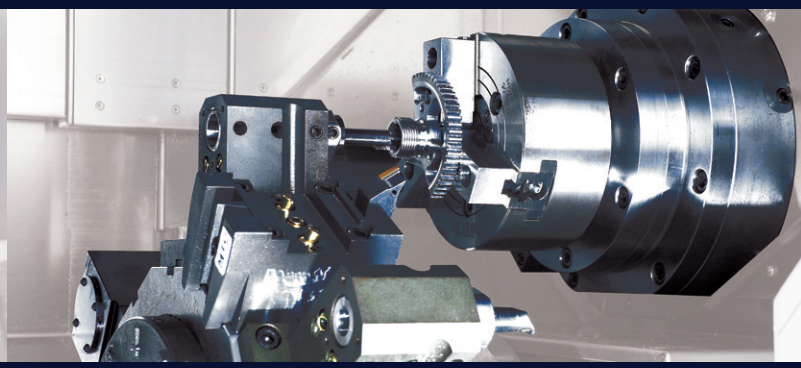

RIGHT SPINDLE
Internal slotting operation

“FIRST AND SECOND PROCESS SIMULTANEOUS MACHINING ” CONCEPT

The PUMA TT can produce different milled features using its spindles. Example: bolt hole pattern using the right spindle to a keyway machined feature using the left spindle.

FIRST PROCESS:
Cutting with the left spindle

PART TRANSFER:
Synchronized rotation and parts feed using the left and right spindles

SECOND PROCESS:
Rear side cutting with the right spindle

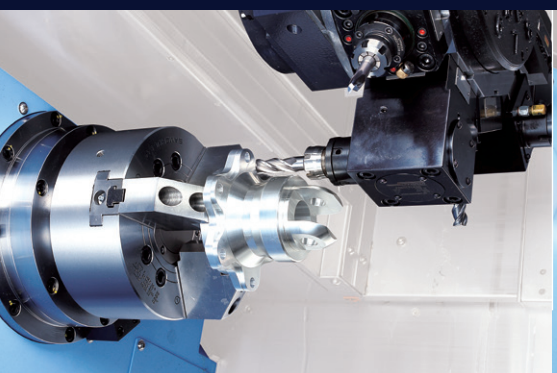

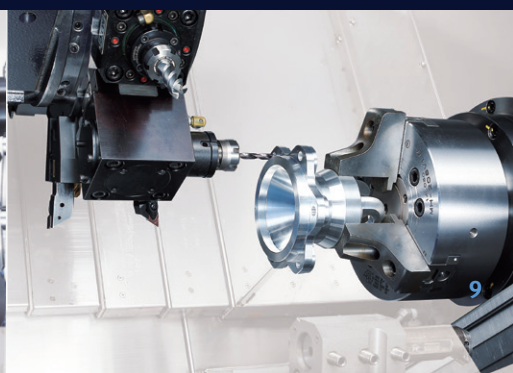

ONE MACHINE, TWO PROCESSES

With the adoption of two opposing spindles and upper/lower turrets, the Puma TT Series can machine both first and second operations simultaneously. Furthermore, the axis travel system, which features high rigidity roller LM guideways and a fast feed rate of 40 m/min, provides speed with process reliability.

TWO OPPOSING SPINDLES AND UPPER AND LOWER TURRETS INSTALLED ON ONE MACHINE

DIVERSE LINE-UP with LARGE CAPABILITY

Rotary tools can be selected for milling, tapping and drilling, while the Y-axis can be used for cutting inclined or curved surfaces. This process-intensive turning center is capable of conducting multiple processes, further widening its potential and appeal.

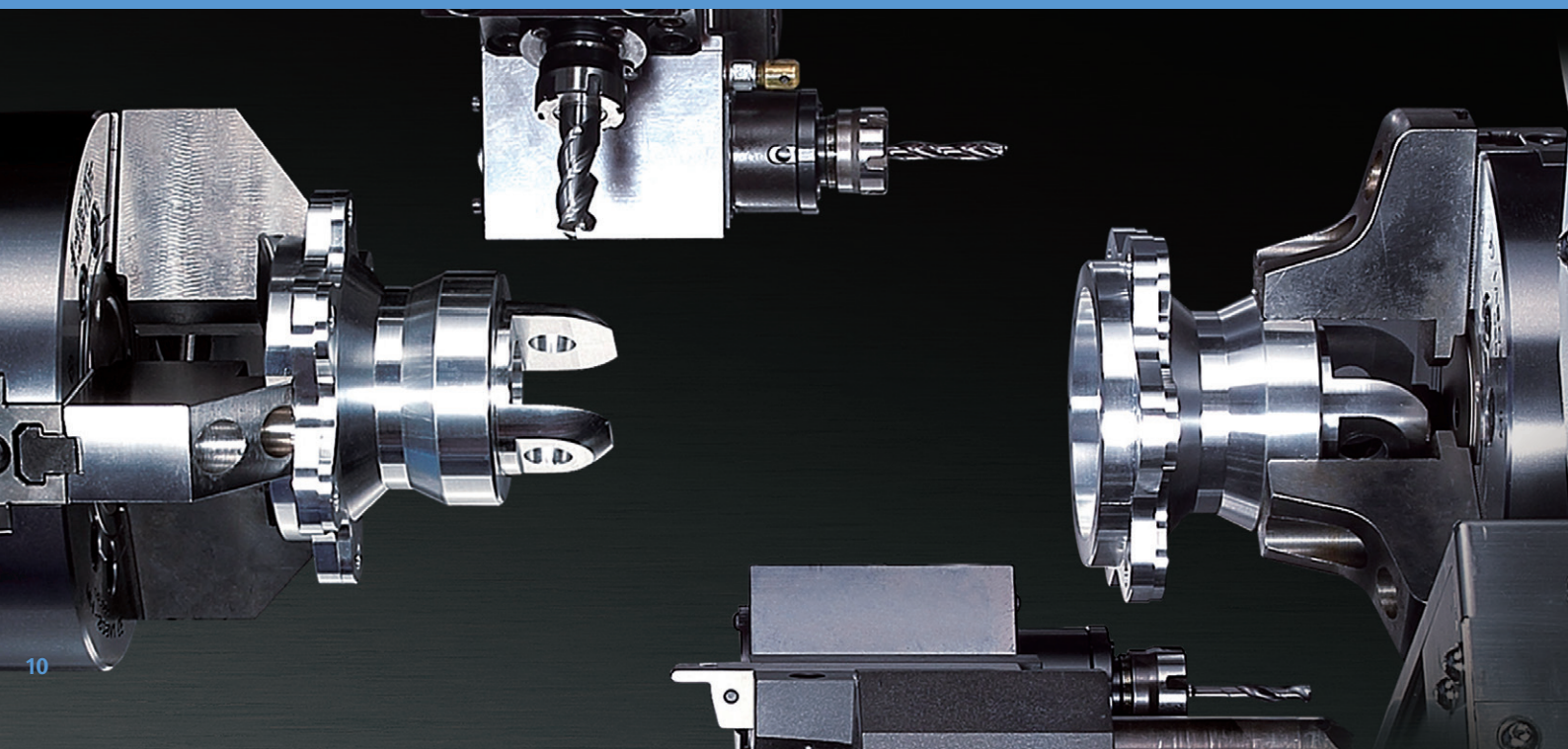

STANDARD & OPTIONAL SPECIFICATIONS

A range of options is available to suit individual requirements.

Description	Features	PUMA TT1800 series
Chuck (Left / Right)	210 mm (8 Inch)	●
	None	○
Jaws (Left / Right)	Soft Jaws	●
	Hardened & Ground Hard Jaws	○
Chucking option	Dual Pressure Chucking	○
	Chuck Clamp Confirmation	●
Tailstock	Tail Center For Turret	○
Coolant Pump (60 / 50Hz)	4.5 / 3.0 Bar	●
	7 / 5, 10 / 7, 14.5 / 10, 28 / 19.5, 70 / 70 bar	○
Coolant options	Oil Skimmer	○
	Coolant Chiller	○
	Coolant Pressure Switch	○
	Cooling Flow Switch	○
	High Coolant Interface	○
	Chuck Coolant (Left / Right)	○
	Through Spindle Coolant(T.S.C) For Spindle (Left / Right)	○
	Coolant Gun	○
Chip processing options	Chip Conveyor_Side Type	○
	Chip Conveyor_Rear Type	○
	Chip Bucket	○
	Air Blow (Left / Right)	○
	Mist Collector	○
Measurement & Automation	Tool Setter (Manual / Auto)	○
	Parts Catcher And Box	○
	Parts Unloader And Conveyor	○
	Work Ejector	○
	Auto Door	○
	Cut-Off Confirmation	○
	Work / Tool Counter	○
	Robot Interface (PMC I/O, Profibus)	○
	Bar Feeder Interface	○
Optional devices	Tool Load Monitoring	○
	Linear Scale (X1, X2, Z1, Z2, Y)	○
	Signal Tower	○
	Air Gun	○
	Air Conditioner For Electric Cabinet	○
	Light For Electric Cabinet	○
	Extra M-Code (4ea)	○
	Auto Power Off	○
	Quick change tooling(CAPTO)	○
Customized Special Option	Coolant level switch : Sensing level - Low	○
	Parts Unloader And Conveyor_Gripper Type	○
	Automatic Top Door	○
	Chip Coveyor_Drum Filter Type	○
	Shower Coolant	○
	Air Limit Sensing On Chuck_Preparation	○
	Rotary Type Window Wiper_Eletrical	○
	TSA (LEFT / Right)	○
	Work & Tool Counter	○
	Tool Setter Extension For Special Chuck	○
	Spindle Air Curtain (LEFT)	○
	Spindle Air Curtain (RIGHT)	○
	MQL System	○
	Chuck Pressure Switch	○

Please contact your Doosan Machine Tools representative for detailed machine information.

● *Standard* ○ *Optional* X *N/A*

PERIPHERAL EQUIPMENT

Chip Conveyor (right side) OPTION

The chip conveyor with its stable design delivers excellent chip disposal, superior operation and maintenance convenience. Users can select the optimum type of conveyor that meets their specific machining and floor space requirements.

Name	Hinged Belt	Magnetic Scrapper	Drum Filter (Single type)	Drum Filter (Double type)
Application	Steel	Cast steel, iron	Cast	Steel, cast, nonferrous metals
Features	• General use • Suitable for steel applications producing 30mm chips or longer	• Easy-to-understand manual • Chips are scraped up and discharged	• Suitable for sludge • Suitable for nonferrous metals	• Suitable for long and short chips • Cooling water filtering function
Shape	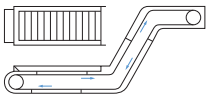	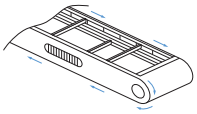	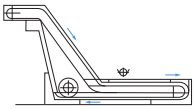	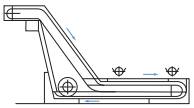

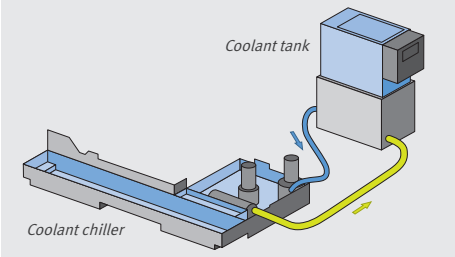

Coolant Chiller (recommended) OPTION

A detachable-type coolant chiller is recommended to control temperature and minimize thermal error.

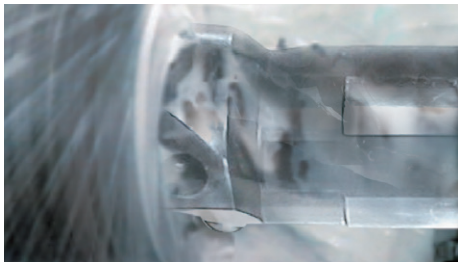

70 bar High Pressure Coolant OPTION

70 bar high pressure coolant suitable for high productivity.

Quick Change Capto OPTION

The Quick-Change tool system simplifies tool change operations. Recommended for users who need to change tools frequently or who need to reduce set-up times.

Optional Equipment

AUTO TOOL SETTER

COOLANT BLOWER

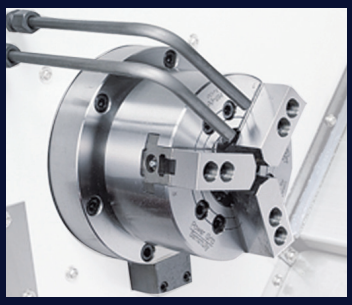

SIGNAL TOWER

COLLET CHUCK

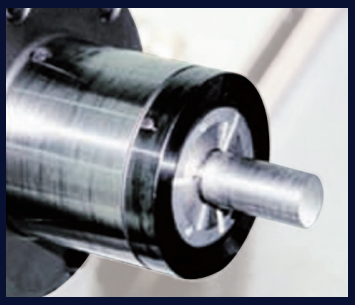

ID/OD SPECIAL HOLDER
(each turret 12ea/tool 24ea)

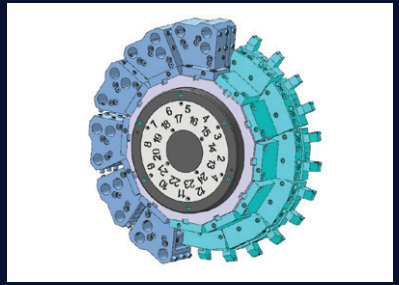

MILLING SPECIAL HOLDER
(each turret 12ea/tool 24ea)

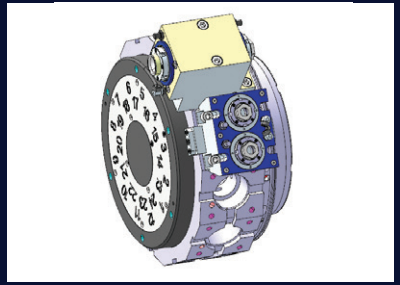

WORK EJECTOR

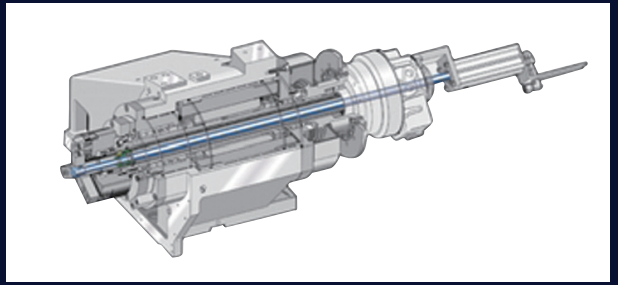

PERIPHERAL EQUIPMENT

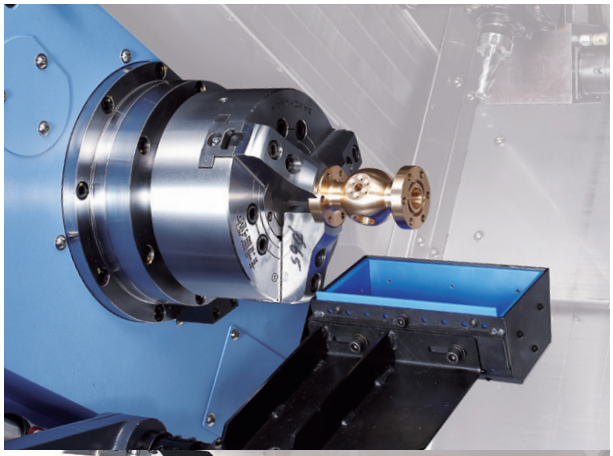

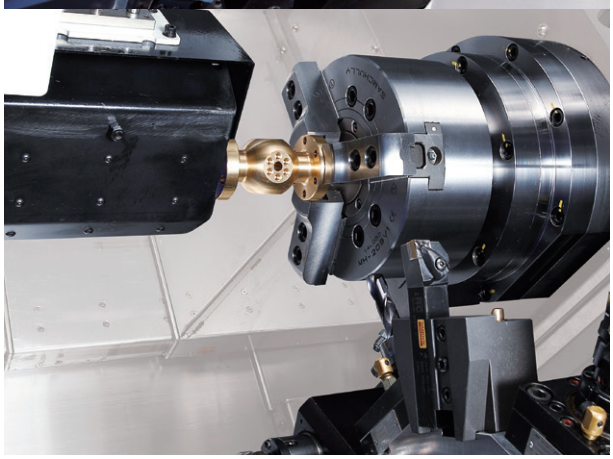

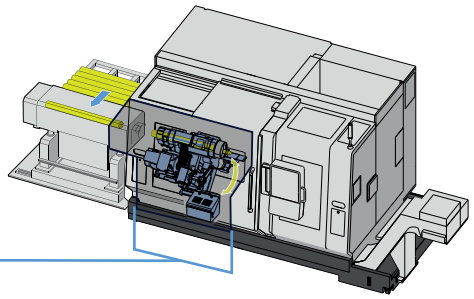

Left Spindle Parts Catcher OPTION

Single operation parts produced on the left spindle, or bar remnants can be ejected into the bucket.

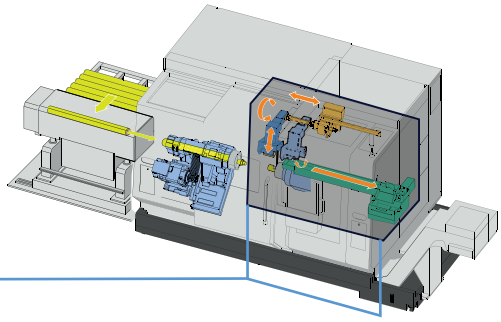

Right Spindle Parts Unloader and Ejector OPTION

Work processed by the right spindle is delivered to the parts unloader by the work ejector and then discharged to the parts conveyor.

Maximum material size for unloader / conveyor system

Max. work diameter

ø65 mm
Ø2.6 inch

Max. work length

150 mm
5.9 inch

Max. work weight

3 kg
6.6 lb

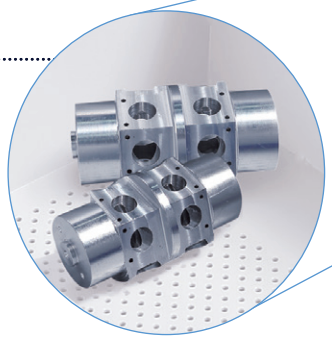

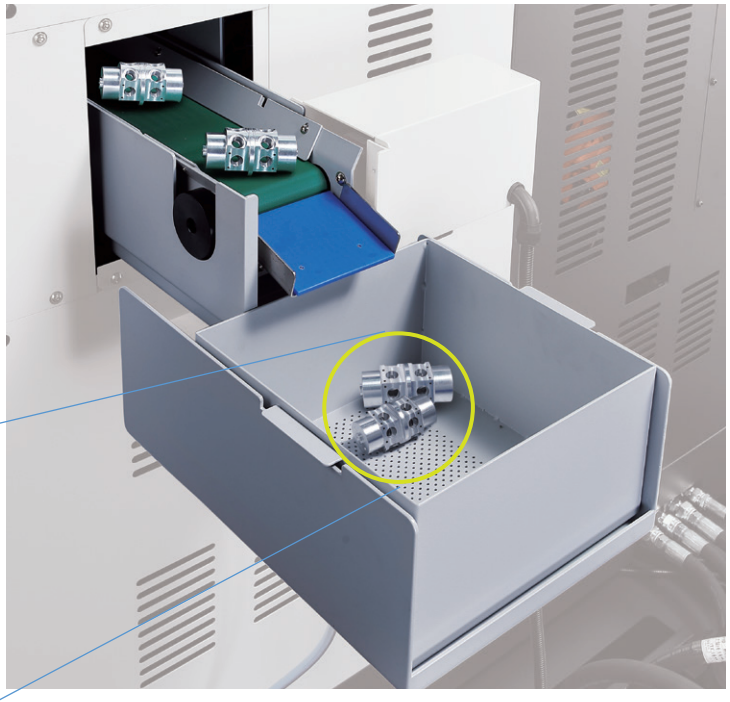

Parts Conveyor OPTION

Finished workpieces are transferred to the indexable output belt conveyor which discharges them to a receiving container.

DOOSAN FANUC i PLUS

Doosan Fanuc i Plus maximizes customer productivity and convenience.

15” Screen + New OP

Doosan Fanuc i Plus’ operation panel enhances operating convenience by incorporating common-design buttons and layout. It features a Qwerty keyboard for fast and easy data input and operation.

Doosan Fanuc i Plus

- 15-inch color display
- Intuitive and user-friendly design

USB and PCMCIA card QWERTY Keyboard

- EZ-guide i standard
- Ergonimic operator panel
- 2MB Memory
- Hot keys

iHMI Touchscreen OPTION

iHMI provides an intuitive interface that uses a touchscreen for quick and easy operation.

Range of Applications

Providing various applications related to planning, machining, improvement and utility, for customer convenience.

Real-Time Custom Macro Function OPTION

During operation of the parts unloader of the right spindle, this function allows the lower turret to conduct the cutting operation for the left spindle. This function also further improves the productivity.

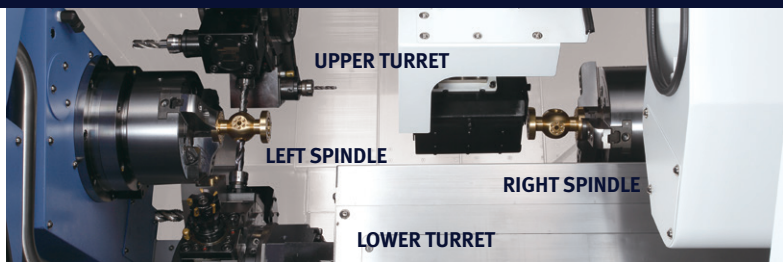

NUMERIC CONTROL SPECIFICATIONS

FANUC

Division	ITEM	Specifications	MS Doosan Fanuc i (F0i-F Plus)	SY Doosan Fanuc i (F0i-F Plus)	MS Fanuc 31i (F31i-B)	SY Fanuc 31i (F31i-B)
Controlled axis	Controlled axes		7 (X1,Z1,C1, X2,Z2C2,A)	8 (X1,Z1,C1,Y, X2,Z2,C2,A)	7 (X1,Z1,C1, X2,Z2C2,A)	8 (X1,Z1,C1,Y, X2,Z2,C2,A)
	Simultaneously controlled axes		4 axes (each path)	4 axes (each path)	4 axes (each path)	4 axes (each path)
Data input/output	Fast data server		○	○	○	○
	Memory card input/output		●	●	●	●
	USB memory input/output		●	●	●	●
Interface function	Embedded Ethernet		●	●	●	●
	Fast Ethernet		○	○	○	○
	Enhanced Embedded Ethernet function		●	●	●	●
Operation	DNC operation	Included in RS232C interface.	●	●	●	●
	DNC operation with memory card		●	●	●	●
Program input	Workpiece coordinate system	G52 - G59	●	●	●	●
Feed function	AI contour control I	G5.1 Q_, 40 Blocks	●	●	●	●
	AI contour control II	G5.1 Q_, 200 Blocks	○	○	○	○
Operation Guidance Function	EZ Guidei (Conversational Programming Solution)		●	●	●	●
	iHMI with Machining Cycle	Note *1) Only with 15" Touch LCD standard	○ *1)	○ *1)	X	X
	Multi path function	Supporting 2 or 3 path machine	●	●	●	●
	EZ Operation package		●	●	●	●
Setting and display	CNC screen dual display function		●	●	●	●
Network	FANUC MTConnect		✪	✪	✪	✪
	FANUC OPC UA		✪	✪	✪	✪
Others	Display unit	15" color LCD	●	●	●	●
		15" color LCD with Touch Panel	○	○	X	X
	Part program storage size & Number of registerable programs	1280M(512KB)_1000 programs	X	X	●	●
		5120M(2MB)_1000 programs	●	●	○	○

● *Standard* ● *Optional* X *N/A* ✪ *Available*

EZ-Guide i

Using the Doosan EZ-Guide i, users can create a cutting program for any desired shape, including patterns, by entering just the dimensions.

EXAMPLE PROGRAMMING : CUTTING SHAPE

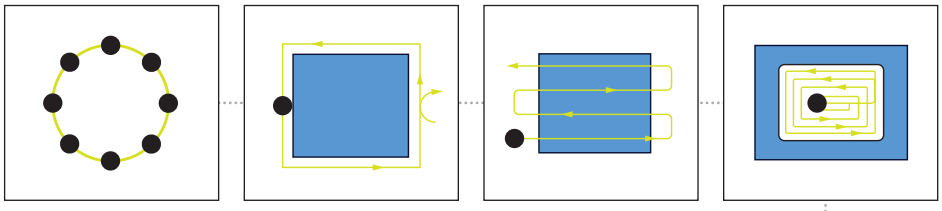

EXAMPLE PART

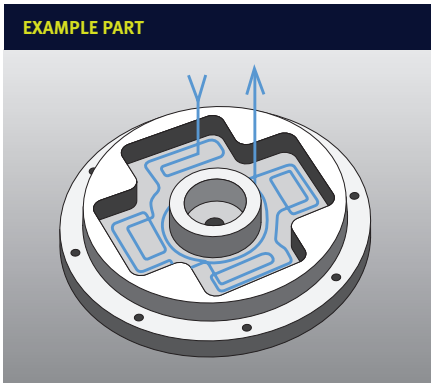

EZ-GUIDE i SCREEN

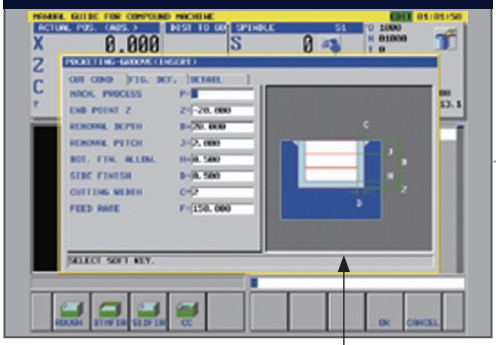

Enter the dimensions of the shape

AUTOMATIC CREATION OF CUTTING PROGRAM

```
O7000 (SAMPLE PROGRAM) ;
...
M3 S1500 ;
G0 X50. Y125. ;
G0 Z30. ;
G1040 T0.5 J3. H0.2 K0.5 ... ;
G1020 H120. V50. U37. W68. ... ;
G0 Z80. ;
M5 ;
```

A cutting program is automatically created with the entered values.

Easy Operation Package

Doosan's Easy Operation Package (EOP) supports the user with functions relating to tool data, error diagnostics, set up and machine monitoring.

Tool monitoring screen

Tool Load Monitoring Function

During cutting operation, abnormal load caused by wear or damage of the tool is detected and an alarm is triggered to prevent further damage.

Parts unloader maintenance and service screen

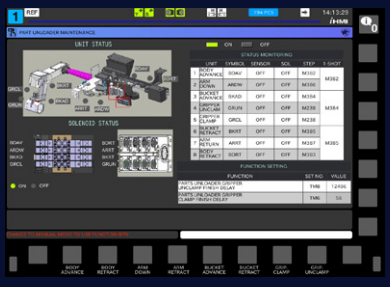

Convenience of Maintenance and Service

The condition and service procedures of the sensors are provided for easy maintenance and servicing of major units.

Crash Avoid Check

Set the interference area between turret and sub spindle to avoid collision.

Tool Management

Q-setter Automatic measurement

Convenient set up for peripheral equipment

Helps tool setter guide, work setting, tailstock setting, and other measurement and parameter control to reduce setting-up time and facilitates operation.

CONVENIENT OPERATION

Siemens 840D

21.5 inch display + New OP

Two path programs are displayed simultaneously in the large 21.5-inch screen for enhanced user convenience.

- **21.5-inch display**
- 6GB user memory
- USB (standard)
- QWERTY keyboard

Convenient Conversational functionality

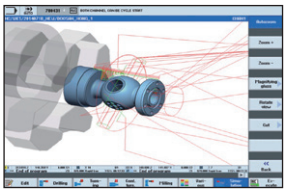

Cutting and operation support function

This function shows a cutting and tool path simulation in real-time.

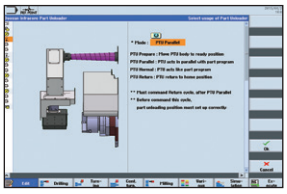

Shop-turn mode
[various]
⬇
[attachments]

The automation elements (parts catcher, parts unloader etc.), can be easily controlled via interactive screens.

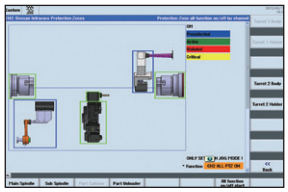

[Custom]
⬇
[Protection zones]

Operation safety function

Protection Zone Synchronized Actions checks the interference between the turret and the spindle to prevent collisions caused by operator error.

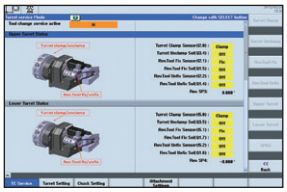

[offset]
⬇
[operating parameter]
⬇
[TC service]

Maintenance and service convenience function

Maintenance and service of major equipment and peripheral devices, including the timer and parts counter settings can be easily undertaken.

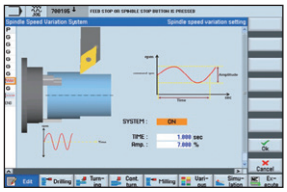

[various]
⬇
[attachment]
⬇
[DSSV]

Machining accuracy improvement

The NC controls spindle speed at an optimal level for precision threading and turning, making it possible to automatically improve surface roughness.

Before applying the function

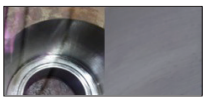

After applying the function

NUMERIC CONTROL SPECIFICATIONS

SIEMENS

Division	ITEM	Specifications	MS		SY	
			S828D	S840D	S828D	S840D
Controlled axis	Controlled axes		X1,Z1,C1,X2,Z2,C2,Z3,C3,C4		X1,Z1,C1,X2,Z2,C2,Z3,C3,C4,Y	
	Simultaneously controlled axes		4 axes	4 axes	4 axes	4 axes
Data input/output	Memory card input/output		X	X	X	X
	USB memory input/output		●	●	●	●
Interface function	Ethernet	(X130)	○	●	○	●
Operation	On network drive	(without EES option, Extcall)	○	●	○	●
	On USB storage medium, e.g. memory stick	(without EES option, Extcall)	●	●	●	●
Program input	Workpiece coordinate system	G54 - G59, G507 - G599	●	●	●	●
Feed function	Advanced surface		X	●	X	●
	Top surface		X	X	X	X
	Look ahead number of block		1	1000	1	1000
Programming & Editing function	3D simulation, finished part		●	●	●	●
	Simultaneous recording		●	●	●	●
	DXF Reader for PC integrated in SINUMERIK Operate		○	○	○	○
Operation Guidance Function	Shopturn		●	●	●	●
	EZ Operation package		●	●	●	●
Setting and display	Operation via a VNC viewer		●	●	●	●
Network	MTConnect		✪	✪	✪	✪
	OPCUA		○	○	○	○
Others	Display unit	15.6" color display with touch screen(SW4.9)	●	○	●	○
		21.5" color display with touch screen(SW4.9)	X	●	X	●
	Part program storage size	CNC user memory 10 MB	●	●	●	●
		CNC user memory 100 MB	○	○	○	○
		CNC user memory 6GB	X	○	X	○
		CNC user memory 40GB (with PCU or IPC)	X	○	X	○
		CNC user memory without limit(Execution from extenal storage devices)(EES / Using by USB or Network)	○	○	○	○
		HMI user memory for CNC part program 6GB	X	●	X	●

● *Standard* ● *Optional* X *N/A* ✪ *Available*

POWER & TORQUE

FANUC

Left and Right spindles
(built-in)

Max. spindle speed : **5000 r/min**

Max. power : **22 kW**
29.5 Hp

Max Torque : **208 N·m**
153.5 ft-lbs

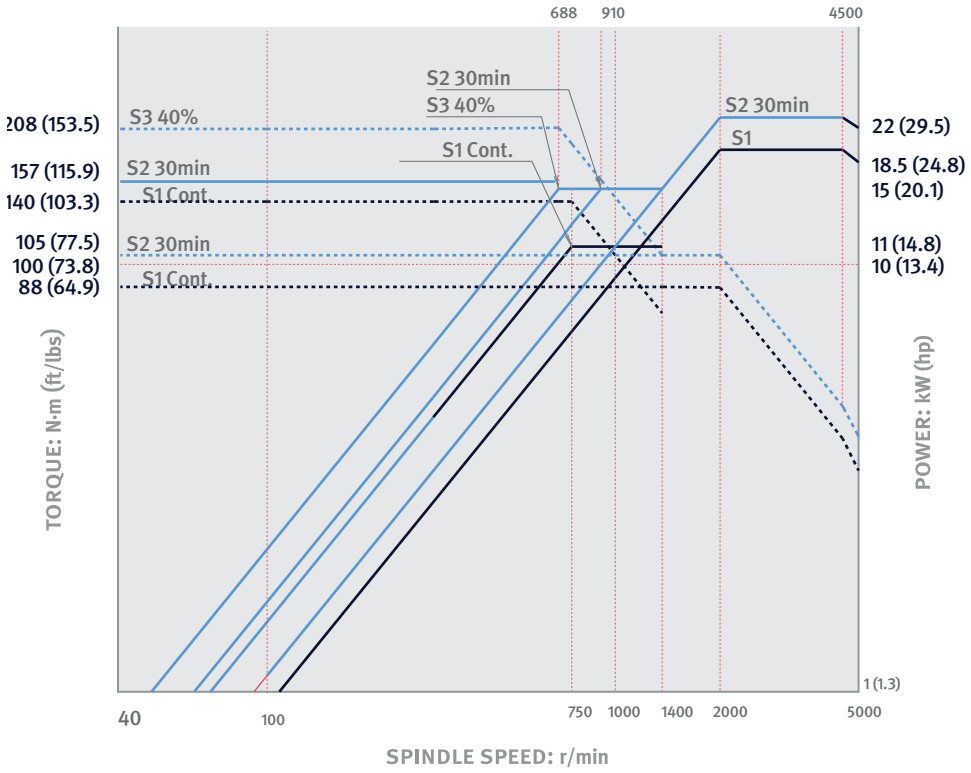

Rotary tool

Max. spindle speed : **5000 r/min**

Max. power : **5.5 kW**
7.4 Hp

Max Torque : **47 N·m**
34.7 ft-lbs

POWER & TORQUE

SIEMENS

Left and Right spindles
(built-in)

Max. spindle speed : **5000** r/min

Max. power : **22** kW
29.5 Hp

Max Torque : **220** N·m
162.4 ft-lbs

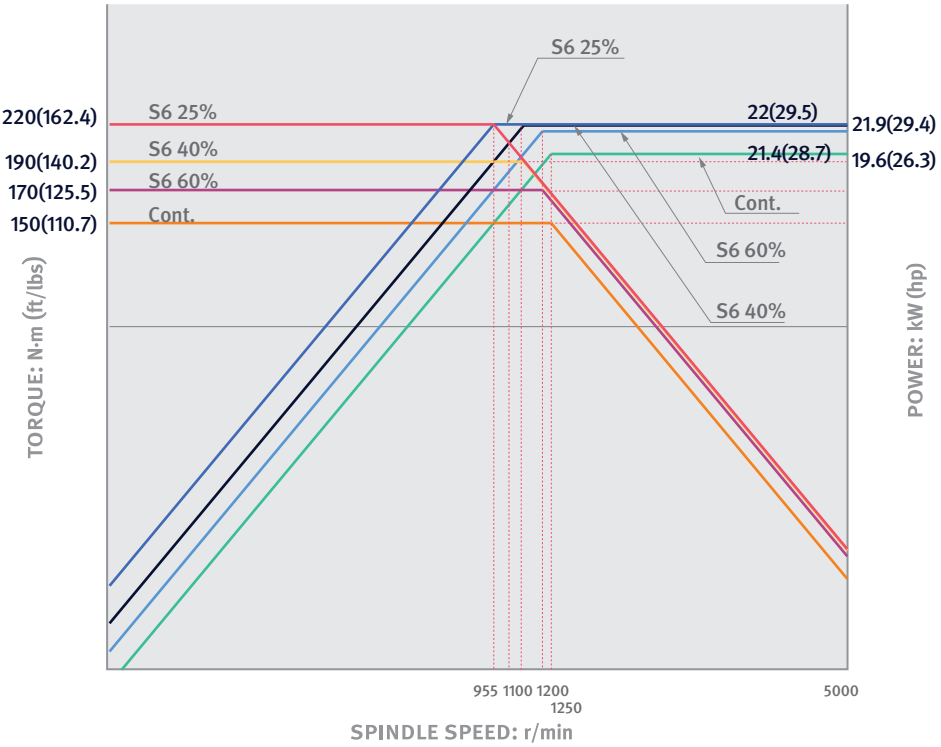

Rotary tool

Max. spindle speed : **5000** r/min

Max. power : **7.8** kW
10.5 Hp

Max Torque : **49** N·m
36.2 ft-lbs

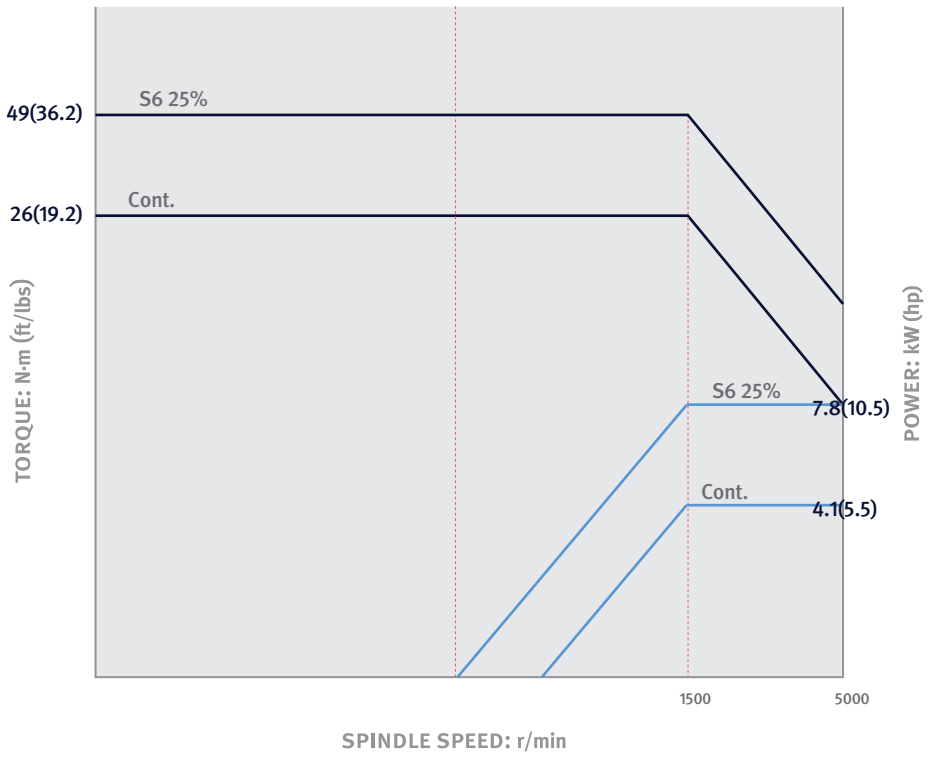

EXTERNAL DIMENSIONS

PUMA TT1800 MS / SY

Unit : mm (inch)

TOP

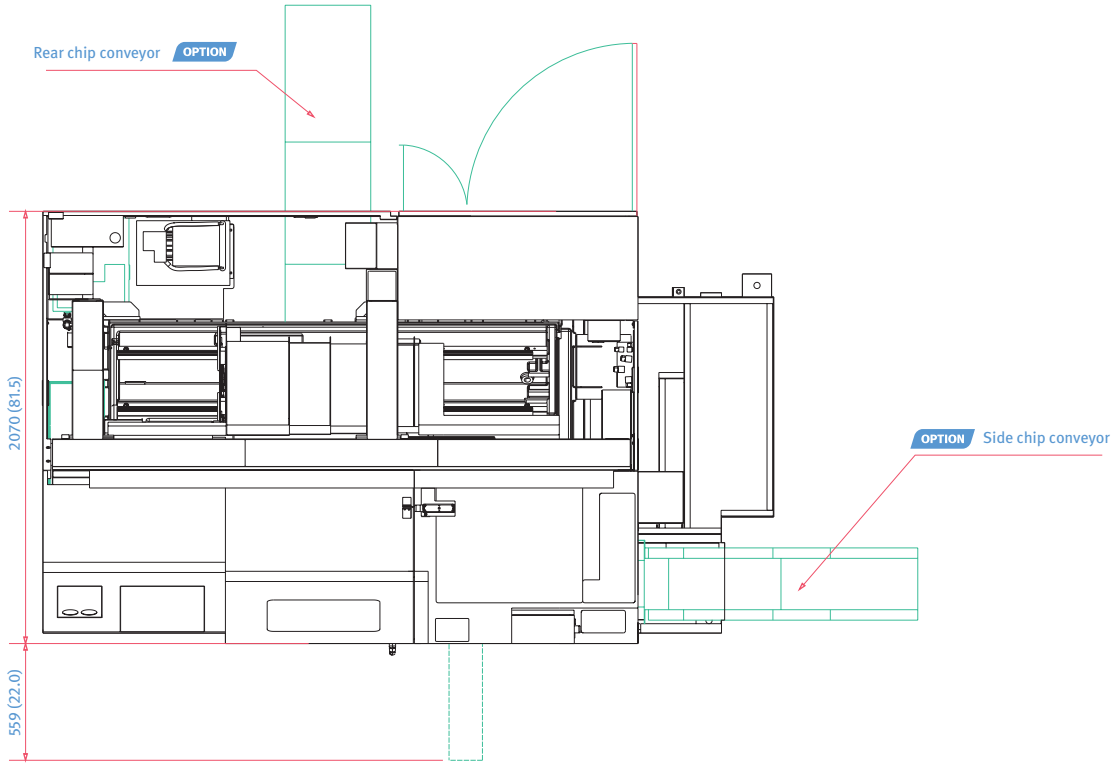

FRONT

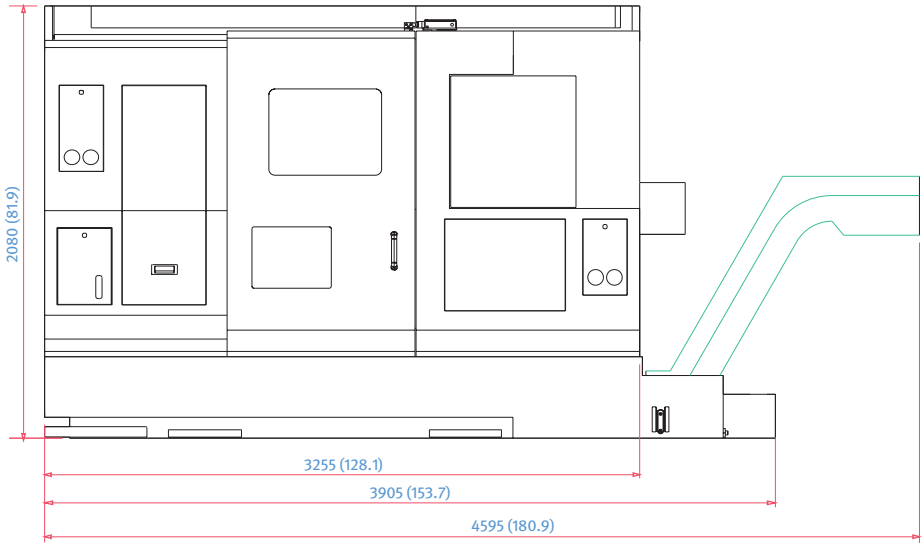

** Some peripheral equipment can be placed in other areas.*

TOOLING SYSTEM

PUMA TT1800 MS / SY

Unit : mm (inch)

STANDARD

** ( ) Supply quantity*

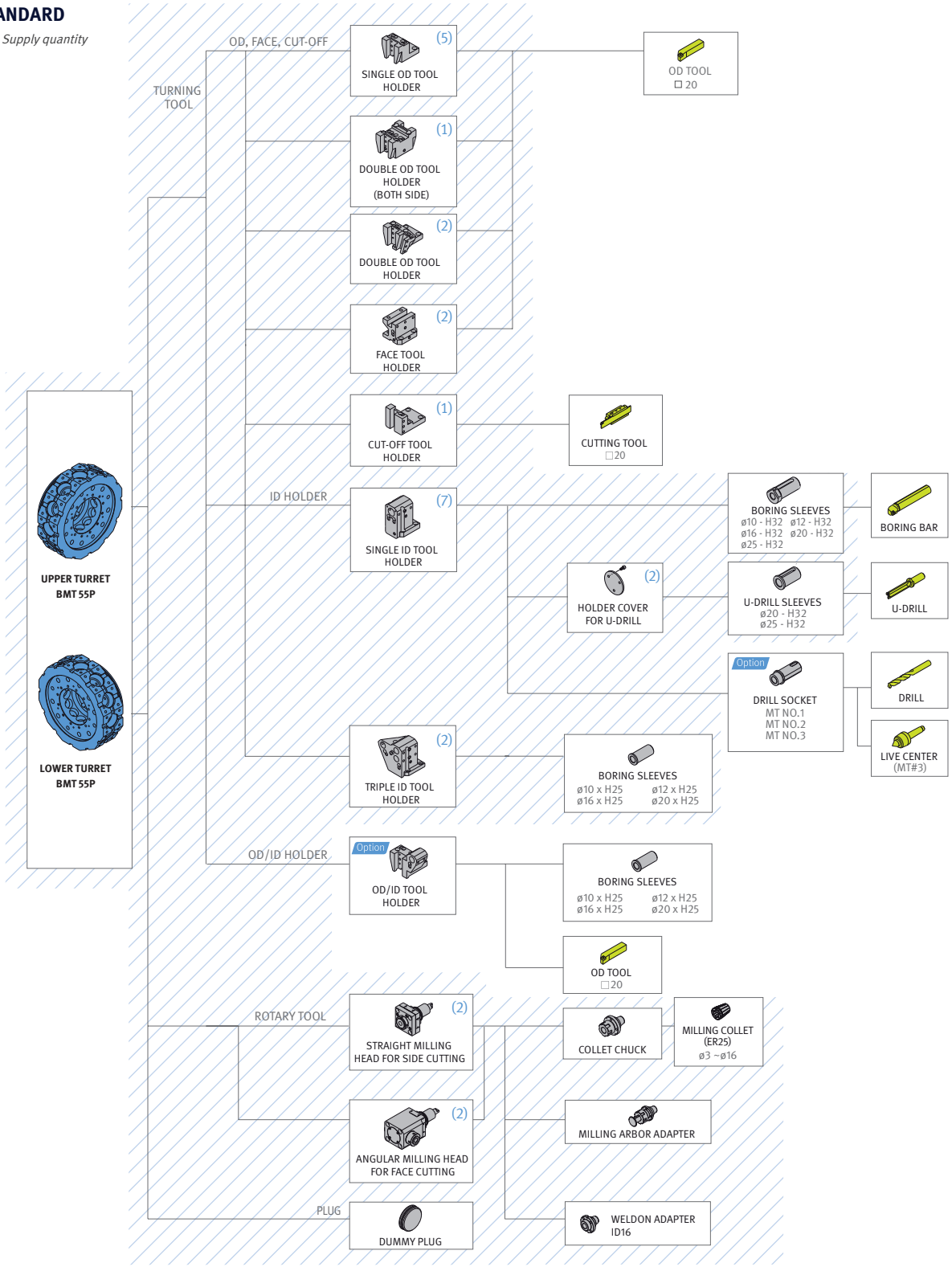

TOOL INTERFERENCE DIAGRAM

PUMA TT1800 MS / SY

Unit : mm (inch)

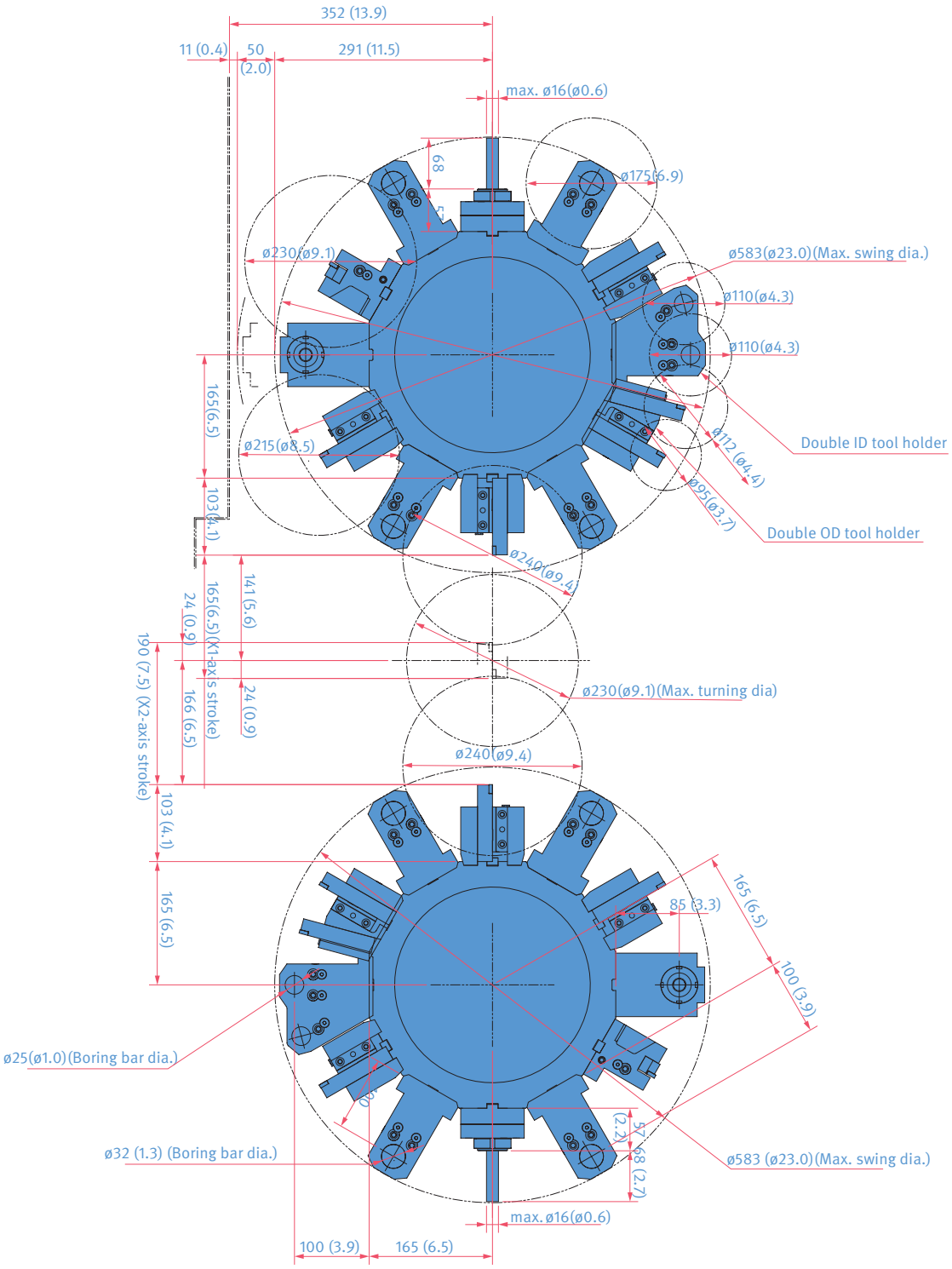

WORKING RANGE DIAGRAM

PUMA TT1800 MS / SY

Unit : mm (inch)

SINGLE OD TOOL HOLDER

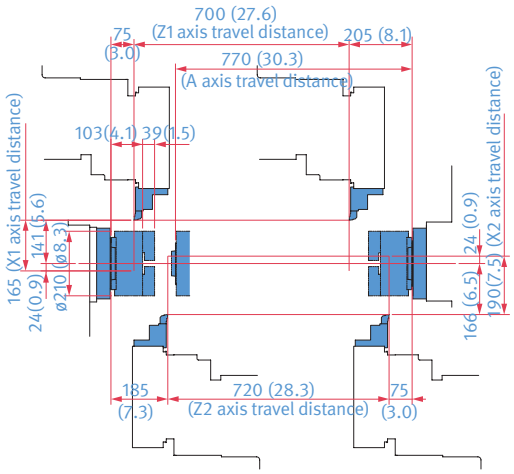

DOUBLE OD TOOL HOLDER

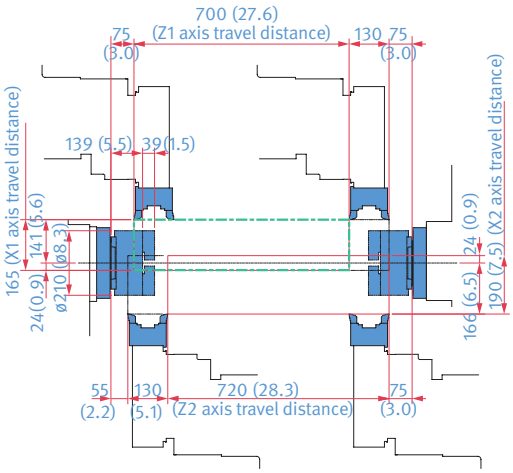

ID TOOL HOLDER

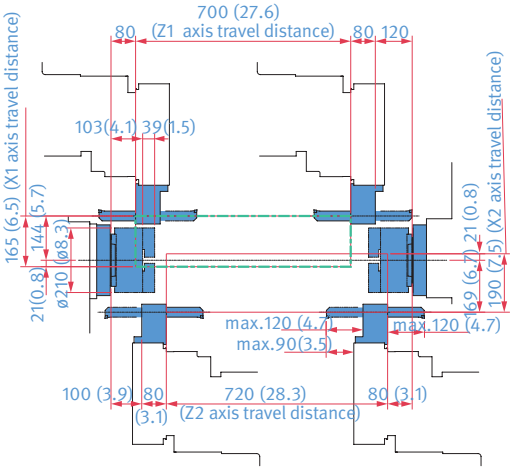

ANGULAR MILLING HEAD

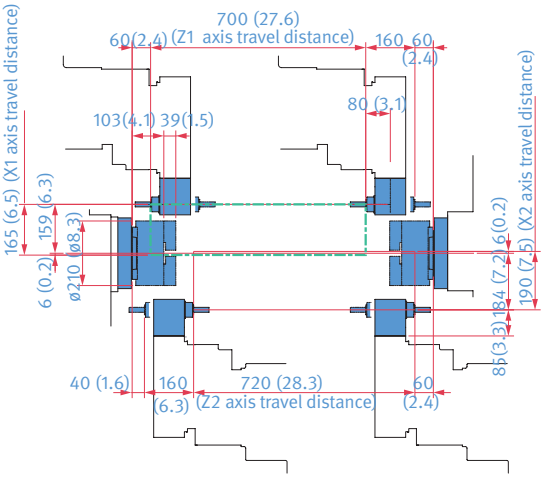

STRAIGHT MILLING HEAD

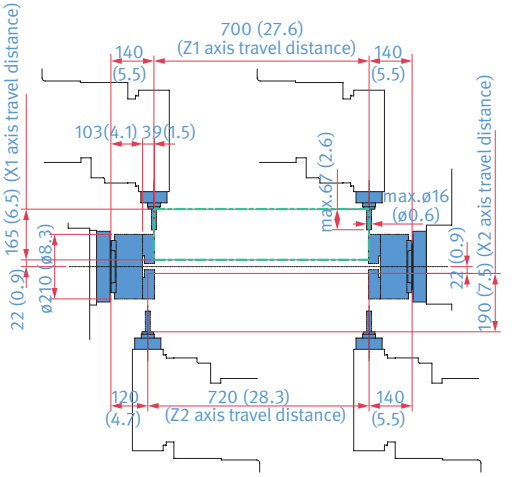

Y axis TRAVEL DISTANCE

Straight milling head

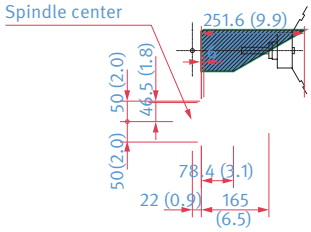

Angular milling head

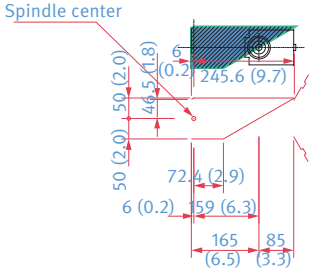

MACHINE SPECIFICATIONS

PUMA TT1800 MS / SY

Description			Unit	PUMA TT1800MS	PUMA TT1800SY
Capacity	Swing over bed		mm (inch)	230 (9.1)	
	Swing over saddle		mm (inch)	230 (9.1)	
	Recommended turning diameter		mm (inch)	210 (8.3)	
	Max. turning diameter		mm (inch)	Upper turret: 230 (9.1) / Lower turret: 230 (9.1)	
	Max. turning length		mm (inch)	230 (9.1)	
	Chuck size		inch	8	
	Bar working diameter		mm (inch)	65 (2.6)	
Feedrate	Travel distance	X1 / 2 axes	mm (inch)	X1: 165 (6.5) / X2: 190 (7.5)	
		Z1 / 2 axes	mm (inch)	Z1: 700 (27.6) / Z2: 720 (28.3)	
		Y-axis	mm (inch)	-	100 (3.9)
		A-axis	mm (inch)	770 (30.3)	
	Rapid traverse	X1 / 2 axes	m/min (ipm)	20 (787.4)	
		Z1 / 2 axes	m/min (ipm)	20 (787.4)	
		Y-axis	m/min (ipm)	-	7.5 (295.3)
		A-axis	m/min (ipm)	40 (1574.8)	
Left spindle / Right spindle	Spindle speed		r/min	5000	
	Spindle motor power (FANUC) (30 min/cont.)		kW (Hp)	22/18.5 (29.5/24.8)	
	Spindle motor power (SIEMENS) (S6 40%/cont.)		kW (Hp)	22/19.6 (29.5/26.3)	
	Max. spindle torque (FANUC)		N·m (ft-lbs)	208 (153.5)	
	Max. spindle torque (SIEMENS)		N.m (ft-ibs)	220 (162.4)	
	Spindle nose		ASA	A2#6	
	Spindle bearing diameter		mm (inch)	110 (4.3)	
	Spindle inner diameter		mm (inch)	76 (3.0)	
	C-axis min. indexing angle		deg	360 (in 0.001deg.increment)	
Turret	No. of tool stations (Upper + Lower)		ea	24 + 24*	
	OD tool size		mm (inch)	20 x 20 (0.8 x 0.8)	
	Max. ID tool size		mm (inch)	32 (1.3)	
	Turret Indexing time		sec	0.15	
	Max. rotary tool speed		r/min	5000	
	Rotary tool motor power (FANUC) (S3 25%/cont.)		kW (Hp)	5.5/1.1 (7.4/1.5)	
	Rotary tool motor power (SIEMENS) (S6 25% / cont.)		kW (HP)	7.8/4.1 (10.5/5.5)	
Power Source	Power consumption		kVA	75.21	
Machine dimensions	Length		mm (inch)	3905 (153.7)	
	Width		mm (inch)	2070 (81.5)	
	Height		mm (inch)	2080 (81.9)	
	Weight		kg (lb)	8600 (18959.5)	8800 (19400.4)
Control	NC system			DOOSAN Fanuc i Plus {FANUC 31i / SIEMENS 840D}**	

** In case of applying double type tool holder for turning (for internal and external machining. ** { } : option*

WHY Y-AXIS?

DOUBLE THE PRODUCTIVITY

Adding a single Y-axis to your machine allows for single-setup efficiency and a new level of accuracy. But if you add a dual Y-axis—as you can in the PUMA TT series—the productivity difference is so striking that you won't ever go back.

DUAL POWER

The PUMA TT series doubles productivity with independently-operating left/right spindles and upper/lower turrets. What's more, the lower Y-axis increases productivity 20% more than having only an upper Y-axis. (PUMA TT1300/2100SYY)

MORE VERSATILITY

With a Y-axis (or, in the case of the PUMA TT, a dual Y-axis), machine shops are capable of a wide variety of multi-axis milling cycles. That means there's a greater potential for done-in-one parts.

WHY DOOSAN?

The Doosan promise, MACHINE GREATNESS, has two important meanings. The first is simple: Doosan makes great machines. The second is a challenge to our end-users. With a product line that is this comprehensive, accurate and reliable, we equip our customers to machine greatness.

The big question: ***Why should you choose Doosan over other options?*** Here's why...

WHAT YOU MAKE AND HOW YOU MAKE IT MATTERS—SO MAKE IT GREAT WITH DOOSAN.

UNBEATABLE MACHINES

You won't find a more comprehensive range or a better combination of value, performance and reliability anywhere else.

READY-TO-MOVE GLOBAL INVENTORY

Machining, turning and 5-axis—with generous standard performance options—are ready to install now.

ROBUST PRODUCT LINE

We offer an impressive range of machine models and hundreds of configurations. Whatever your machining needs and requirements, there's a Doosan for you.

EXPERT SERVICE

Our dedicated, experienced and knowledgeable team is totally committed to improving your productivity, growth and success.

CUSTOMER SUPPORT AND SERVICES

We’re there for you whenever you need us.

We help our customers operate at maximum efficiency by providing them with a range of tried, tested and trusted services - from pre-sales consultancy to post-sales support.

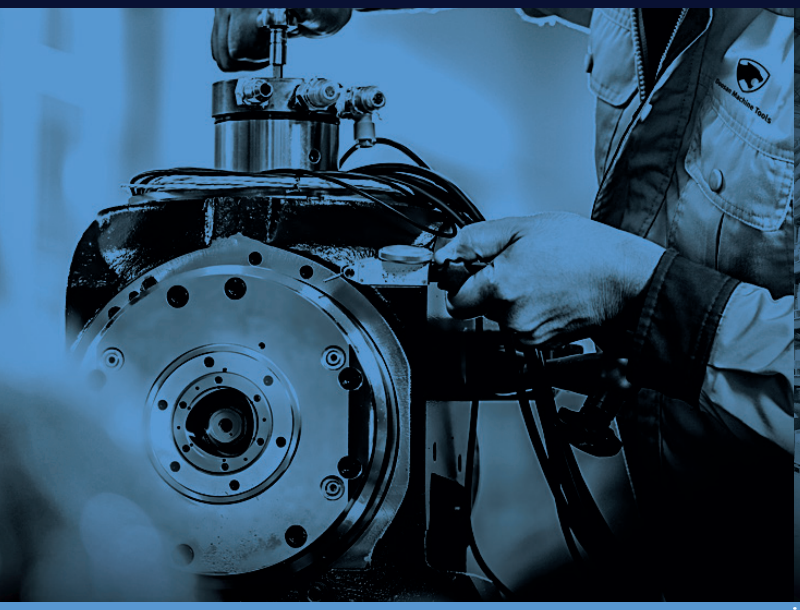

FIELD SERVICES

- On-site service
- Machine installation and testing
- Scheduled preventive maintenance
- Machine repair service

PARTS SUPPLY

- Supplying a wide range of original Doosan spare parts
- Parts repair service

TRAINING

- Programming, machine setup and operation
- Electrical and mechanical maintenance
- Applications engineering

TECHNICAL SUPPORT

- Supports machining methods and technology
- Responds to technical queries
- Provides technical consultancy

RESPONDING TO CUSTOMERS
ANYTIME, ANYWHERE

Doosan Machine Tools' Global Network

Doosan Machine Tools provides systems-based professional support services, before and after the machine tool sale, by responding quickly and efficiently to customers. By supplying spare parts, product training, field service and technical support, we provide the expert care, attention and assistance our customers expect from a market leader.

Global Sales and Service Support Network

4	**Corporations**
167	**Dealer Networks**
51	**Technical Centers** Technical Center, Sales Support, Service Support, Parts Support
200	**Service Posts**
3	**Factories**

Doosan Machine Tools

doosanmachinetools.com

Head Office
22F T Tower, 30, Sowol-ro 2-gil
Jung-gu, Seoul, Korea, 04637
Tel +82-2-6972-0370/0350
Fax +82-2-6972-0400

Doosan Machine Tools America
19A Chapin Road, Pine Brook
New Jersey 07058, United States
Tel: +1-973-618-2500
Fax: +1-973-618-2501

Doosan Machine Tools Europe
Emdener Strasse 24, D-41540
Dormagen, Germany
Tel: +49-2133-5067-100
Fax: +49-2133-5067-111

Doosan Machine Tools India
No.82, Jakkuar Village
Yelahanka Hobil, Bangalore-560064
Tel: + 91-80-2205-6900
E-mail: india@doosanmt.com

Doosan Machine Tools China
Room 101,201,301, Building 39 Xinzhuan
Highway No.258 Songjiang District
China Shanghai (201612)
Tel: +86 21-5445-1155
Fax: +86 21-6405-1472

Sales inquiry
sales@doosanmt.com

*For more details, please contact Doosan Machine Tools.

*Specifications and information contained within this catalogue may be changed without prior notice.

*Doosan Machine Tools Co., Ltd. is a subsidiary of MBK Partners. The trademark DOOSAN is used under a licensing agreement with Doosan Corporation, the registered trademark holder.

Fire Safety Precautions

There is a high risk of fire when using non-water-soluble cutting fluids, processing flammable materials, neglecting the controlled and careful use of coolants and modifying the machine without the consent of the manufacturer. Always check the SAFETY GUIDELINES carefully before using the machine.

ver. EN 210430 SU